TRIPOD USER'S MANUAL

Thank you for using ZOMEI tripod for photography.
Before using it, you should read the instructions carefully.

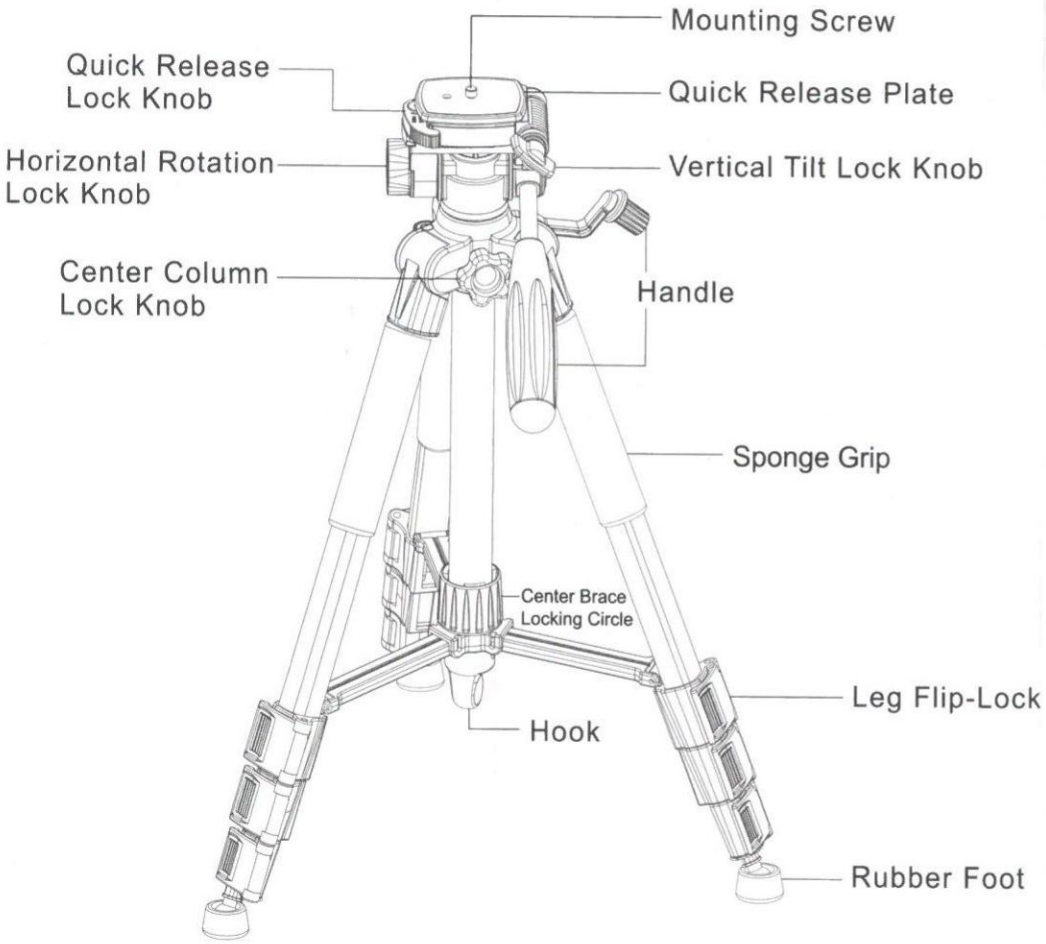

Products are subject to change without notice.

Notice

1. When you receive this product, make sure that all the necessary parts are available in the package.
2. Before placing your camera onto the tripod, check that all the locks are tightened to avoid accidental damage.
3. Don't exceed the maximum specified load capacity.
4. Avoid using at temperatures under -40°F or over 212°F
5. Better not use it in seawater. Please dry and clean the tripod after used in wet, sandy and dusty environment.
6. Please don't carry your camera together with the tripod when moving around.
7. Keep the tripod away from electronic.
8. Please confirm the size with real products.

Contact Us:

ZOMEI.hk

Bingo@zomei.hk

xzzomei2016@outlook.com

zomei2016@outlook.com

Hours of Operation:
Monday - Saturday 5:30 PM - 3:00 AM PST

TRIPOD USER'S MANUAL

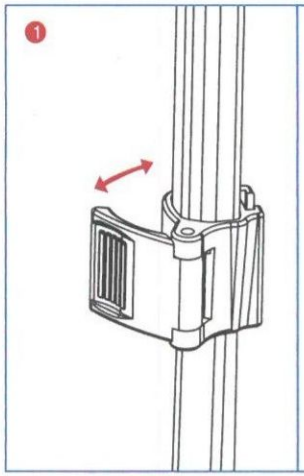

① The leg filp-lock usage

a. Pull open the leg filp-lock and adjust to the required height. Then press down the leg filp-lock.

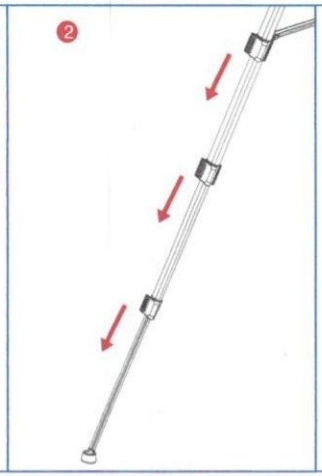

② How to extend tripod legs:

Repeat step one to extend all tripod legs.

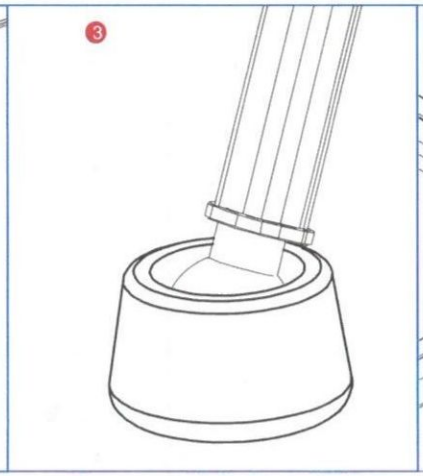

③ Integrated rubber feet:

Antislip, durability and environment friendly

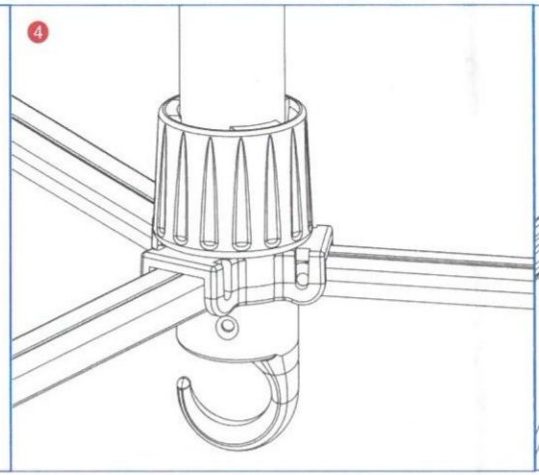

④ The hook usage:

Increased stability of use in outdoors with the extra weight added on gravity hook.

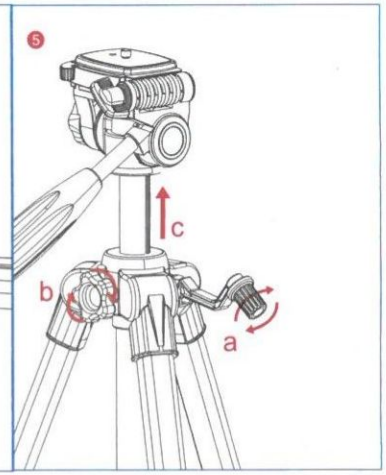

⑤ The center column usage

a. Use the handle to adjust the height.

b. After adjusting to suitable height, use the center column lock knob to lock it.

c. Center column with rocker: easy to suitable height.

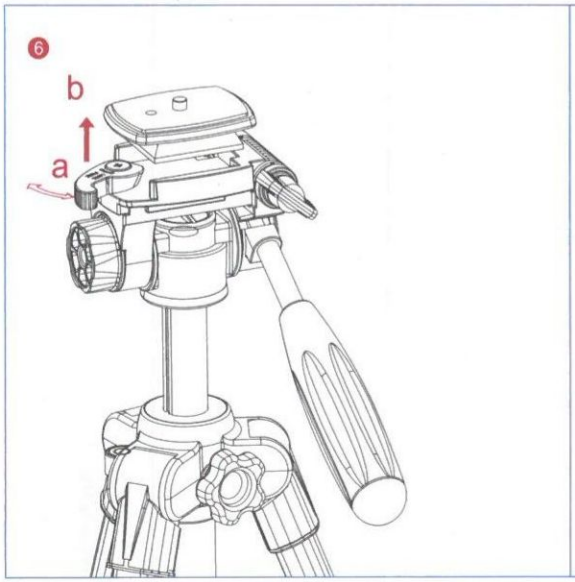

⑥The quick release plate usage

a. Pull open the quick knob , you can easy to remove the quick release plate.

b. Quick release system for easy removal and replacement of equimpment.

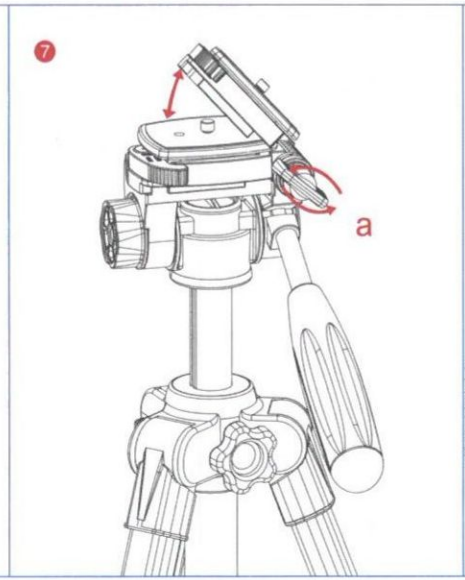

⑦The platform plate usage

a. Losen the vertical tilt lock knob to adjust the angle of the platform, it could reach 90 angle to match the use of multifunction.

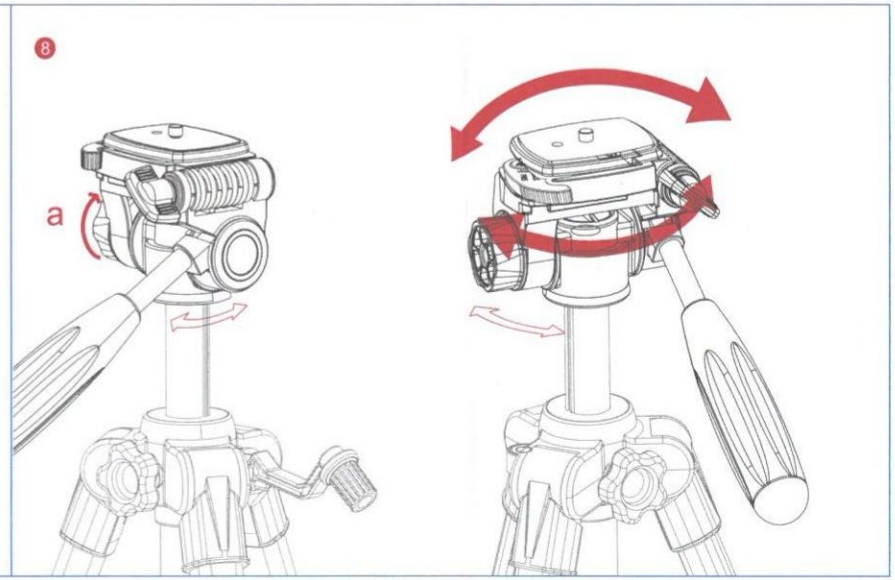

⑧ The Horizontal rotation usage

a.Losen the horizontal rotation lock knob to rotate pan head directions, it could reach 360 angle to match the use of multifunction.